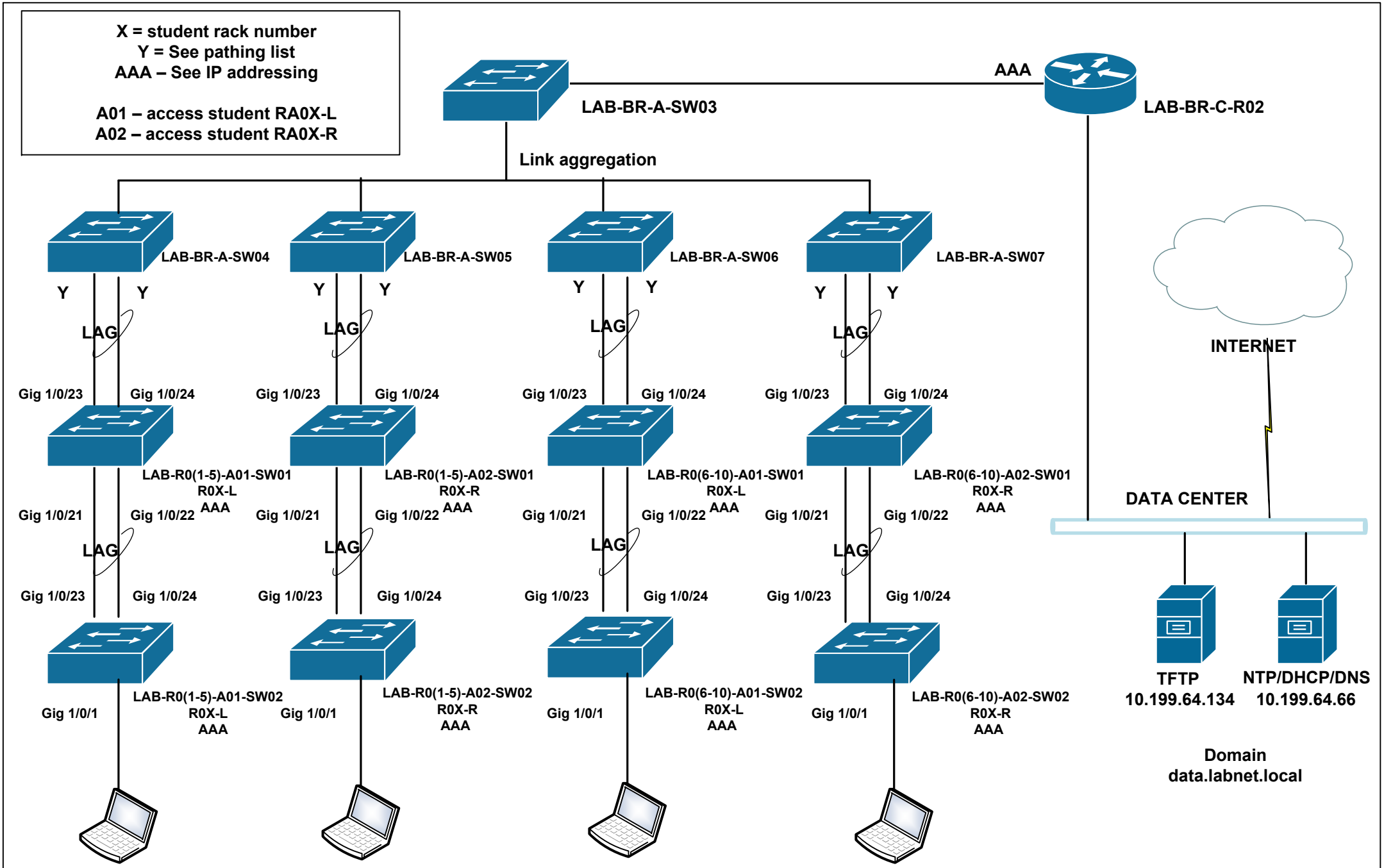

PXL	Title: LAB 2 – ETHERCHANNEL CONFIGURATION	Drawn by: Wim Leppens	Group(s): 1SNE
		Page 1 of 3 Version: V1.0	Date: 28-03-24

All rights reserved. Passing on and copying of this document, use and communication of its contents not permitted without written authorisation from PXL Digital

VLANs per Student Rack

R0X-L
Vlan X1 – Management
Vlan X2 – Data_Users
Vlan X3 – Voice_Users
Vlan X4 – Reserved
Vlan 99 - Native

R0X-R
Vlan X5 – Management
Vlan X6 – Data_Users
Vlan X7 – Voice_Users
Vlan X8 – Reserved
Vlan 99 - Native

Subnets per Student Rack

R0X-L
Vlan X1 – 172.18.x.0/28
Vlan X2 – 172.18.x.16/28
Vlan X3 – 172.18.x.32/28
Vlan X4 – 172.18.x.48/28

R0X-R
Vlan X5 – 172.18.x.64/28
Vlan X6 – 172.18.x.80/28
Vlan X7 – 172.18.x.96/28
Vlan X8 – 172.18.x.112/28

IP addressing solid structure Subnets Student Rack

1ste client address - HRSP/VRRP default-gateway
2nd client address - LAB-BR-C-R02
3rd client address - LAB-R0X-A01(02)-SW01 (mgmt subnet only)
4th client address - LAB-R0X-A01(02)-SW02 (mgmt subnet only)

R0X-L
172.18.X.21-30 client address – DHCP assigned (Data user subnet only)

R0X-R
172.18.X.85-94 client address – DHCP assigned (Data user subnet only)

X = student rack number
Y = See pathing list
AAA – See IP addressing

C01 – core student RA0X-L
A01 – access student RA0X-L
C02 – core student RA0X-R
A02 – access student RA0X-R

All rights reserved. Passing on and copying of this document, use and communication of its contents not permitted without written authorisation from PXL Digital

X = student rack number
Y = See pathing list
AAA – See IP addressing

C01 – core student RA0X-L
A01 – access student RA0X-L
C02 – core student RA0X-R
A02 – access student RA0X-R

Patching information Student Rack 1 -5

R0X-L
Port 2-3

R0X-R
Port 10-11

Patching information Central Rack

R0X-L

LAB-R01-A01-SW01 – Gig 1/0/23 - LAB-BR-A-SW04 – Fa 0/1
LAB-R01-A01-SW01 - Gig 1/0/24 - LAB-BR-A-SW04 – Fa 0/2
LAB-R02-A01-SW01 – Gig 1/0/23 - LAB-BR-A-SW04 – Fa 0/3
LAB-R02-A01-SW01 - Gig 1/0/24 - LAB-BR-A-SW04 – Fa 0/4
LAB-R03-A01-SW01 – Gig 1/0/23 - LAB-BR-A-SW04 – Fa 0/5
LAB-R03-A01-SW01 - Gig 1/0/24 - LAB-BR-A-SW04 – Fa 0/6
LAB-R04-A01-SW01 – Gig 1/0/23 - LAB-BR-A-SW04 – Fa 0/7
LAB-R04-A01-SW01 - Gig 1/0/24 - LAB-BR-A-SW04 – Fa 0/8
LAB-R05-A01-SW01 – Gig 1/0/23 - LAB-BR-A-SW04 – Fa 0/9
LAB-R05-A01-SW01 - Gig 1/0/24 - LAB-BR-A-SW04 – Fa 0/10

R0X-R

LAB-R01-A02-SW01 – Gig 1/0/23 - LAB-BR-A-SW05 – Fa 0/1
LAB-R01-A02-SW01 - Gig 1/0/24 - LAB-BR-A-SW05 – Fa 0/2
LAB-R02-A02-SW01 – Gig 1/0/23 - LAB-BR-A-SW05 – Fa 0/3
LAB-R02-A02-SW01 - Gig 1/0/24 - LAB-BR-A-SW05 – Fa 0/4
LAB-R03-A02-SW01 – Gig 1/0/23 - LAB-BR-A-SW05 – Fa 0/5
LAB-R03-A02-SW01 - Gig 1/0/24 - LAB-BR-A-SW05 – Fa 0/6
LAB-R04-A02-SW01 – Gig 1/0/23 - LAB-BR-A-SW05 – Fa 0/7
LAB-R04-A02-SW01 - Gig 1/0/24 - LAB-BR-A-SW05 – Fa 0/8
LAB-R05-A02-SW01 – Gig 1/0/23 - LAB-BR-A-SW05 – Fa 0/9
LAB-R05-A02-SW01 - Gig 1/0/24 - LAB-BR-A-SW05 – Fa 0/10

Patching information Student Rack 6 - 10

R0X-L
Port 2-3

R0X-R
Port 10-11

Patching information Central Rack

RA0X-L

LAB-R06-A01-SW01 – Gig 1/0/23 - LAB-BR-A-SW06 – Fa 0/1
LAB-R06-A01-SW01 - Gig 1/0/24 - LAB-BR-A-SW06 – Fa 0/2
LAB-R07-A01-SW01 – Gig 1/0/23 - LAB-BR-A-SW06 – Fa 0/3
LAB-R07-A01-SW01 - Gig 1/0/24 - LAB-BR-A-SW06 – Fa 0/4
LAB-R08-A01-SW01 – Gig 1/0/23 - LAB-BR-A-SW06 – Fa 0/5
LAB-R08-A01-SW01 - Gig 1/0/24 - LAB-BR-A-SW06 – Fa 0/6
LAB-R09-A01-SW01 – Gig 1/0/23 - LAB-BR-A-SW06 – Fa 0/7
LAB-R09-A01-SW01 - Gig 1/0/24 - LAB-BR-A-SW06 – Fa 0/8
LAB-R10-A01-SW01 – Gig 1/0/23 - LAB-BR-A-SW06 – Fa 0/9
LAB-R10-A01-SW01 - Gig 1/0/24 - LAB-BR-A-SW06 – Fa 0/10

RA0X-R

LAB-R06-A02-SW01 – Gig 1/0/23 - LAB-BR-A-SW07 – Fa 0/1
LAB-R06-A02-SW01 - Gig 1/0/24 - LAB-BR-A-SW07 – Fa 0/2
LAB-R07-A02-SW01 – Gig 1/0/23 - LAB-BR-A-SW07 – Fa 0/3
LAB-R07-A02-SW01 - Gig 1/0/24 - LAB-BR-A-SW07 – Fa 0/4
LAB-R08-A02-SW01 – Gig 1/0/23 - LAB-BR-A-SW07 – Fa 0/5
LAB-R08-A02-SW01 - Gig 1/0/24 - LAB-BR-A-SW07 – Fa 0/6
LAB-R09-A02-SW01 – Gig 1/0/23 - LAB-BR-A-SW07 – Fa 0/7
LAB-R09-A02-SW01 - Gig 1/0/24 - LAB-BR-A-SW07 – Fa 0/8
LAB-R10-A02-SW01 – Gig 1/0/23 - LAB-BR-A-SW07 – Fa 0/9
LAB-R10-A02-SW01 - Gig 1/0/24 - LAB-BR-A-SW07 – Fa 0/10

All rights reserved. Passing on and copying of this document, use and communication of its contents not permitted without written authorisation from PXL Digital